ZETA ROD® Systems

MODEL ZRS R30

ZR14P Zeta Rod

DIMENSIONAL DRAWINGS
ZRPJR Power Supply

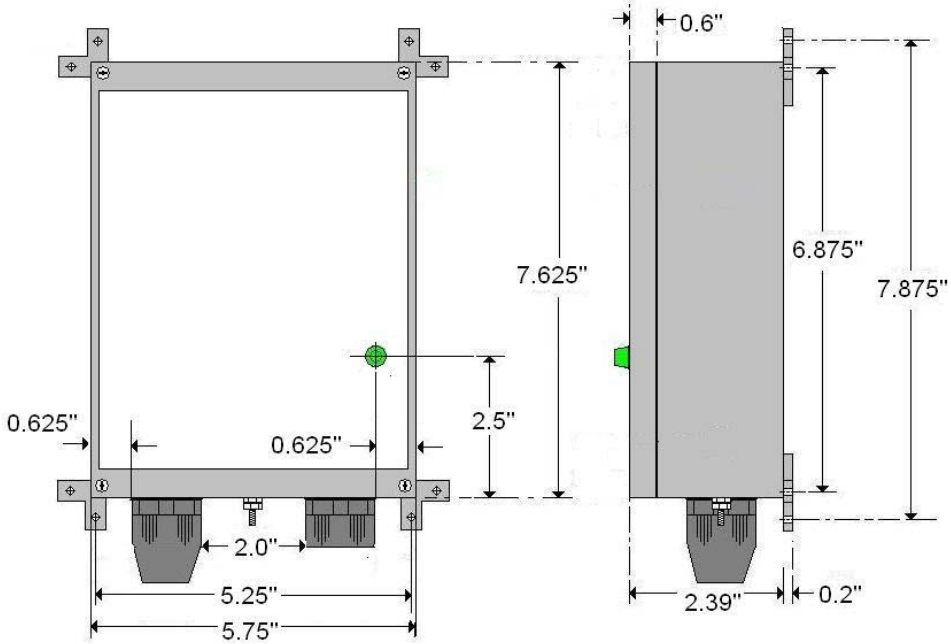

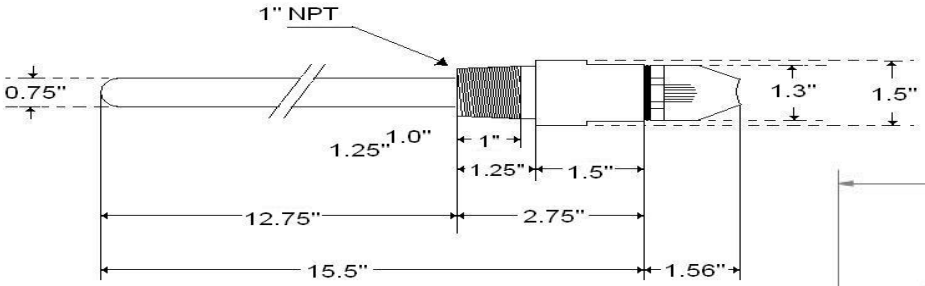
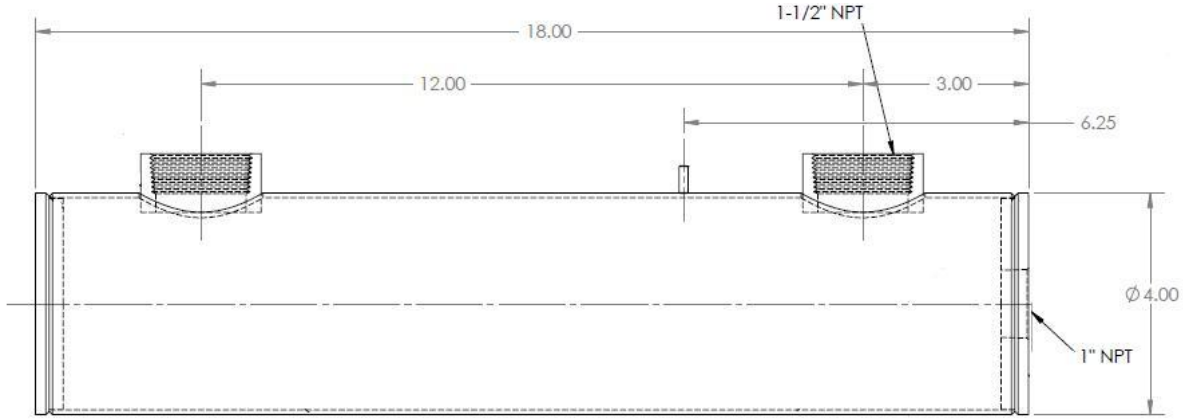
ZR150S Reaction Chamber